Three-way Mixing Valve

Submittal Information
Revision A: Jan. 14, 2014

Project Information

Job Name:

Location: | Part No. Ordered:

Engineer: | Date Submitted:

Contractor: | Submitted By:

Manufacturer's Representative: | Approved By:

Technical Data

Material	
Valve:	Forged brass
Stem:	Brass
Press ring:	Brass
Ball:	Brass (chrome-plated)
Seat:	Modified Teflon®
O-rings:	Ethylene propylene diene monomer (EPDM) rubber
Connection type:	Sweat
Temperature range:	20°F to 240°F (-7°C to 115°C); 134.6°F (57°C) ambient
Maximum operating pressure:	300 psi (2,100 kPa)
Maximum shutoff pressure:	125 psi (875 kPa)
Service:	Closed-system hot and cold water Maximum 50% glycol
Electrical rating:	24 VAC +/- 10% 60 Hz
Power consumption:	7.2 Watts, 0.3 Amps
Connections:	Screw terminal block

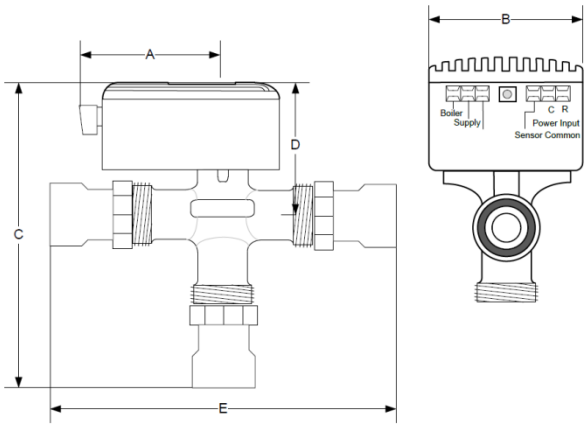

Product Information and Application Use

The Uponor Three-way Mixing Valve is a microprocessor-controlled valve designed to regulate the supply water temperature to a radiant heating system by modulating the position of the valve. Mixed supply setpoint can be configured to reset from the outdoor air temperature or a fixed setpoint. Optional boiler sensor can be used to provide boiler protection in non-condensing boiler applications.

✓	Description	Part Number	A	B	C	D	E	Weight
☐	¾" Three-way Mixing Valve, (Cv=4.5)	A3040075	3"	2⅜"	5⅜"	2 9/16"	4¾"	1.5 lbs.
☐	1" Three-way Mixing Valve, (Cv=4.5)	A3040100	3"	2⅜"	6⅝"	2 9/16"	7¼"	1.5 lbs.

Installation

Screw terminal connectors on the Three-way Mixing Valve. Refer to the Three-way Mixing Valve Installation Manual for more information.

Standards

Class II wiring

Codes

N/A

Listings

N/A

Related Applications

Radiant Floor Heating Systems

Contact Information

Uponor, Inc.
5925 148th Street West
Apple Valley, MN 55124 USA
Phone: 800.321.4739
Fax: 952.891.2008
www.uponorpro.com

Uponor Ltd.
2000 Argentia Rd., Plaza 1, Ste. 200
Mississauga, ON L5N 1W1 CANADA
Phone: 888.994.7726
Fax: 800.638.9517
www.uponorpro.com