Commercial Radiant Heating and Cooling

Quick-reference Guide

uponor

www.uponorengineering.com

The information in this document assumes typical construction methods used in commercial radiant heating and cooling installations.

Quick-quote Procedure

1. Determine parameters (A), (B).
2. For each area, calculate total tubing (D).
3. Based on tubing required, estimate the number of loops (E). Make sure to account for leader lengths.
4. Based on number of loops, determine number of manifolds (F). Make sure to check flow rates.
5. Determine coils to minimize waste (I).
6. Size manifold cabinets (J).
7. Include accessories in quote.

A. Typical Design Parameters — Heating

Floor Capacity (BTUH/SF)	30
Ceiling Capacity (BTUH/SF)	18
Maximum Surface Temperature	84
Average Water Temperature	95-110
Typical Design Delta T	10-20
Typical Room Setpoint	68
Typical Tubing Diameter	½ - ¾
Typical On-center Spacing	9" - 12"

B. Typical Design Parameters — Cooling

Floor Capacity (BTUH/SF)	12
Ceiling Capacity (BTUH/SF)	30
Minimum Surface Temperature	66
Average Water Temperature	55-58
Typical Design Delta T	5-8
Typical Room Setpoint	78
Typical Tubing Diameter	½ - ¾
Typical On-center Spacing	6" - 9"

Notes:
1. Capacities shown assume bare concrete floor. Adjustments required for flooring.
2. Floor-cooling capacity does not include direct solar absorption, which could increase capacity to 31 BTUH/SF.

C. Estimating Capacity

Q (BTU/H) = H x Delta T x Surface Area

H =	Floor	Wall	Ceiling
Cool	1.23	1.40	1.94
Heat	1.94	1.40	1.06

Notes:
1. Delta T = ABS (Space Temperature - Controlled Surface Temperature)
2. Assumes that space temperature is close to or equal to operative temperature
3. Surface area = active area
4. Does not include direct solar absorption

D. Estimating Tubing Required

T = Area x 12/o.c. Spacing

OR T = Area x Multiplier

Spacing	Multiplier	Spacing	Multiplier
6"	2.00	9"	1.33
7"	1.71	12"	1.00
8"	1.50	18"	0.67

E. Determining # of Loops

# of loops = T / loop length

Tubing	Max. Length
⅜"	125-150
½"	250-300
⅝"	350-450
¾"	450 -500

Notes:
1. Maximum loop lengths determined by pressure drop. Goal PD < 10ft.
2. Pressure drops can vary greatly based on operating temperature, flow rate, and glycol percentage.
3. Be sure to include leader tubing

F. Sizing Manifolds

Size manifold based on # of loops and flow

GPM = Q / (500 X Delta T)

Manifold	Max. Loops	Max. GPM
Engineered Polymer (EP)	12	15.4
TruFLOW™ Jr.	12	14
TruFLOW Classic	12	21

G. Radiant Rollout™ Mat Options

Spacing:	9" o.c.	6" o.c.
Width	4.5' or 9'	5' or 10'
Max. Mat Length	165' for ½", 225' for ⅝"	
Diameter	½" or ⅝"	
Tubing	Wirsbo hePEX™	
Header	¾" Reverse Return or None	

H. Uponor PEX-a Properties

200°F	180°F	73.4°F
80 PSI	100 PSI	160 PSI

I. Wirsbo hePEX™ Coils

⅜"	100', 400', 1000'
½"	100', 300', 500', 1000'
⅝"	100', 300', 400', 1000'
¾"	100', 300', 500', 1000'
1"	100', 300', 500'
Custom coils available	

J. Sizing Manifold Cabinets

Loops	TF CL/Jr.	TF w/BV	EP	EP w/BV
2-4	24	24	24	24
5	24	24	24	30.5
6	24	30.5	24	30.5
7	24	30.5	30.5	30.5
8	30.5	30.5	30.5	39
9	n/a	n/a	30.5	39
10	30.5	39	30.5	39
11-12	39	39	39	39

For further guidance, please contact your local Uponor representative or Uponor Design Services at 888.594.7726 or design.services@uponor.com.

Slab on Grade

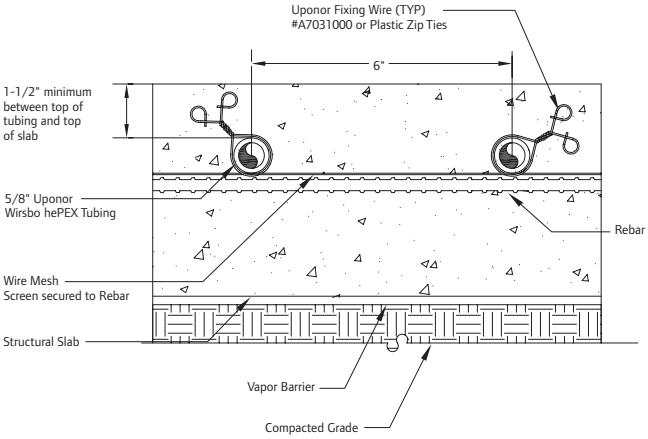

Suspended Grade

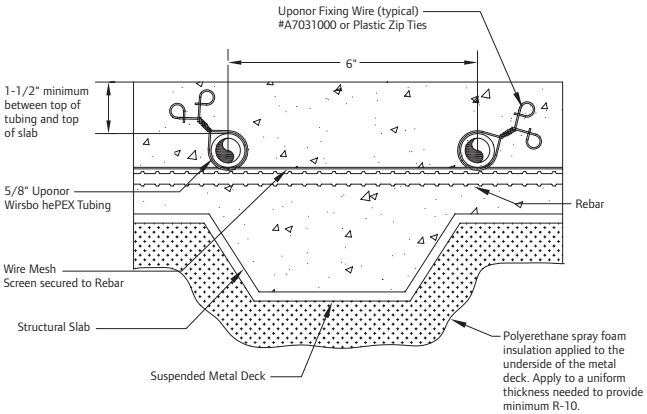

Topping Slab (Fixing Wire)

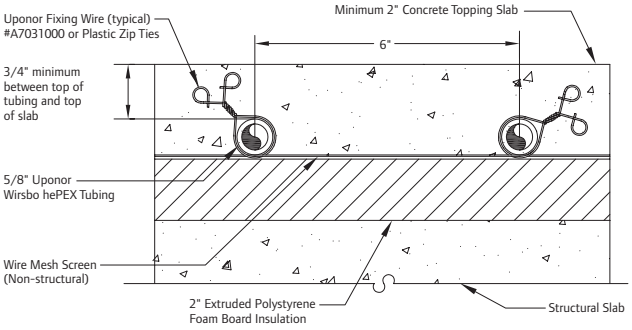

Topping Slab (Staples)

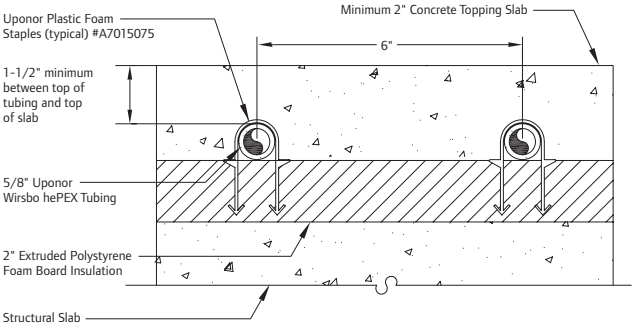

Local Secondary Injection

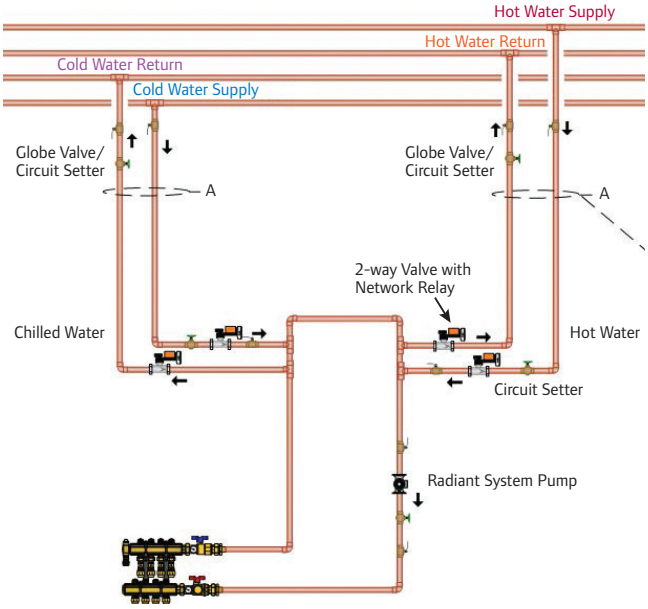

Heating/Cooling Switchover

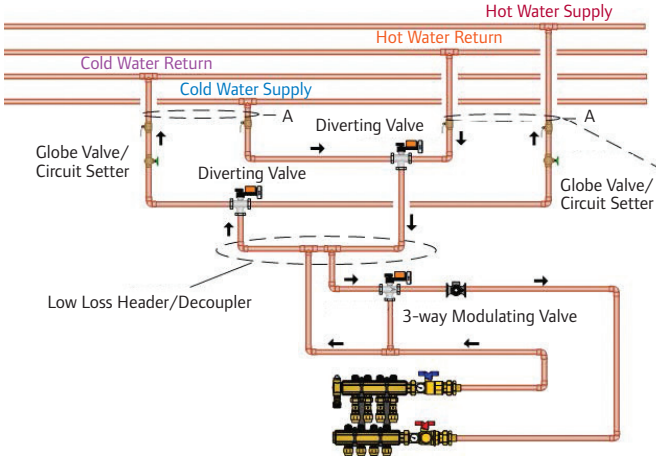

Uponor, Inc.
5925 148th Street West
Apple Valley, MN 55124 USA
Tel: 800.321.4739
Fax: 952.891.2008

Uponor Ltd.
2000 Argentia Rd., Plaza 1, Ste. 200
Mississauga, ON L5N 1W1 CANADA
Tel: 888.994.7726
Fax: 800.638.9517

uponor

www.uponorengineering.com

RHC_RefGuide_H466_1012, Copyright © 2012 Uponor. Printed in the United States