Wall Sleeve with Heat Shrink Kit

Submittal Information
Revision B: Nov. 9, 2009

Project Information

Job Name:

Location: | Part No. Ordered:

Engineer: | Date Submitted:

Contractor: | Submitted By:

Manufacturer's Representative: | Approved By:

Technical Data

Material:

Sleeve:	Corrugated high-density polyethylene (HDPE) outer jacket with smooth interior wall
Heat Shrink Seal:	As manufactured by Raychem® or equivalent

Product Information and Application Use

Uponor features the Wall Sleeve with Heat Shrink Kit for new concrete walls. The Wall Sleeve can be field-cut for proper fit within concrete forms and used with the Compression Wall Seal or Shrink Sleeve. Although not engineered for specific bearing loads, it offers installation convenience and compatibility.

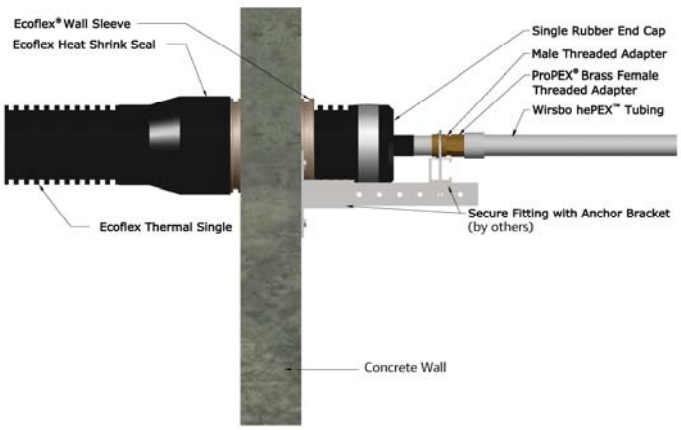

✓	Description	Part Number	OD	ID	Length	Weight
☐	Wall Sleeve with Heat Shrink for 2.7" Jacket	1018266	3.50"	3.00"	15.0"	1.25 lbs.
☐	Wall Sleeve with Heat Shrink for 5.5" Jacket	1018269	7.75"	6.75"	15.0"	2.50 lbs.
☐	Wall Sleeve with Heat Shrink for 6.9" Jacket	1018270	9.00"	7.75"	15.5"	3.12 lbs.
☐	Wall Sleeve with Heat Shrink for 7.9" Jacket	1018268	10.00"	8.50"	15.5"	4.00 lbs.

Installation

This product can be stored outside without damage. Refer to the Pre-insulated Pipe Systems Design and Installation Manual for installation details.

Standards

N/A

Codes

N/A

Listings

N/A

Related Applications

Radiant Heating and Cooling Systems
Snow and Ice Melting Systems
Permafrost Protection Systems
Turf Conditioning Systems

Contact Information

Uponor, Inc.
5925 148th Street West
Apple Valley, MN 55124 USA
Phone: (800) 321-4739
Fax: (952) 891-2008
www.uponor-usa.com

Uponor Ltd.
2000 Argentia Rd., Plaza 1, Ste. 200
Mississauga, ON L5N 1W1 CANADA
Phone: (888) 994-7726
Fax: (800) 638-9517
www.uponor.ca