5925 148th Street West
Apple Valley, MN 55124
Phone: (800) 321-4739
Fax: (952) 891-1409
www.wirsbo.com

# *AQUASAFE™ Four-port Fitting Subassembly*

**Submittal Information**
*Component*

### *Project Information*

Job Name:_____ Part No. Ordered:_____
Location:_____ Quantity Ordered:_____
_____ P.O. Number:_____
Engineer:_____ Date Submitted:_____
Contractor:_____ Submitted By:_____
Mfg. Rep:_____ Approved By:_____

### *Technical Data*

Material ..... 300 Series Stainless Steel
Fitting type ..... Wirsbo ProPEX® (ASTM F1960)
PEX tubing connection size ..... 1/2"

### *Dimensional Information*

| *A* | *B* | *C* | *Weight* |
|---|---|---|---|
| 2.72" | 3.09" | 2.06" | 0.56 lbs. |

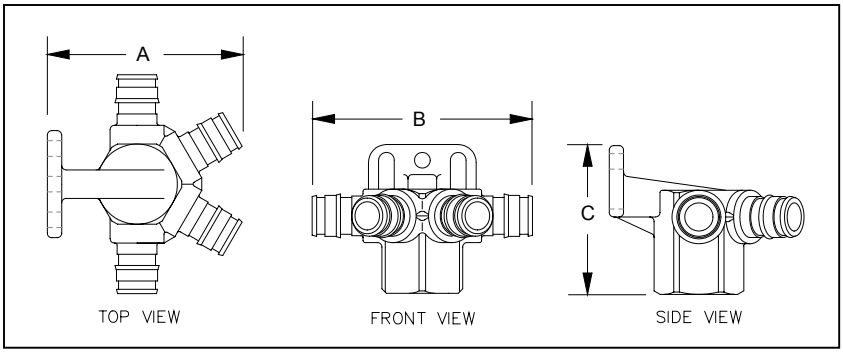


### *Product Information and Application Use*

The AQUASAFE's patented four-port fitting is used in conjunction with the respective Reliable® sprinkler head to provide a multi-purpose fire sprinkler system. AQUASAFE system is installed with the cold side of the Wirsbo AQUAPEX® plumbing system for residential applications. The four-port design eliminates any stagnant loops within the domestic potable water system and provides guaranteed flow to the sprinkler head upon activation. The connections on the four-port fitting are made with the durable Wirsbo ProPEX fitting. The four-port fitting is designed for use only with 1/2" Wirsbo AQUAPEX tubing.

### *Accessories*

- Q71600 and Q71800 series sprinkler heads with 0.04 gpm/ft$^2$ densities
- Q74000 and Q74900 series sprinkler heads with 0.05 gpm/ft$^2$ densities
- F1120500: 1/2" AQUAPEX tubing
- Q4690502: 1/2" ProPEX rings

### *Codes and Standards*

- ASTM F1960
- UL Standard 1821
- ANSI/NSF Standard 14
- ANSI/NSF Standard 61
- NFPA 13D
- International Plumbing Code (IPC)
- Uniform Plumbing Code (UPC)

### *Installation*

- The four-port fitting comes from the manufacturer with the appropriate sprinkler head installed.
- If sprinkler head replacement is required in the field, ensure the proper tools, sealant and instructions are utilized.
- Refer to the AQUASAFE Installation Handbook for additional information.

© 2003 Uponor Wirsbo AQUASAFE Four-Port Fitting Submittal — September 1, 2003