ProPEX® Red Brass Male Threaded Adapter

Submittal Information
Revision B: June 15, 2010

Project Information

Job Name:

Location: | Part No. Ordered:

Engineer: | Date Submitted:

Contractor: | Submitted By:

Manufacturer's Representative: | Approved By:

Technical Data

Material: C314 Red Brass

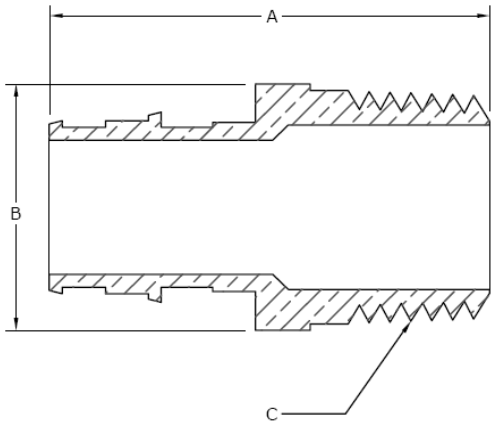

Product Information and Application Use

ProPEX® Red Brass Male Threaded Adapter connects Uponor AquaPEX® tubing to male NPT threads and is intended as a transition fitting from metal to PEX.[1] Having enhanced resistance to dezincification and stress-corrosion cracking, red brass fittings are safe for direct burial in soil in accordance with Uponor installation guidelines.

✓	Description	Part Number	A	B	C	Weight
☐	ProPEX Red Brass Male Threaded Adapter, ½" PEX x ½"	V4525050	1.75"	1.00"	0.50" Male	0.12 lbs.
☐	ProPEX Red Brass Male Threaded Adapter, ¾" PEX x ¾"	V4527575	2.04"	1.25"	0.75" Male	0.20 lbs.

Installation

A ProPEX Ring is required to make a ProPEX connection. Use the appropriate ProPEX Ring size for tubing connections. Refer to the Uponor Professional Plumbing Installation Guide for additional information.

Standards

CAN/CSA B137.5; ASTM F877; ASTM F1960

Codes

IPC; UPC; NSPC; NPC of Canada

Listings

IAPMO 3558; HUD MR 1269; ICC ESR 1099; ANSI/NSF 14- and 61-certified

Related Applications

PEX-a Plumbing Systems

Contact Information

Uponor, Inc.
5925 148th Street West
Apple Valley, MN 55124 USA
Phone: (800) 321-4739
Fax: (952) 891-2008
www.uponor-usa.com

Uponor Ltd.
2000 Argentia Rd., Plaza 1, Ste. 200
Mississauga, ON L5N 1W1 CANADA
Phone: (888) 994-7726
Fax: (800) 638-9517
www.uponor.ca

[1]ProPEX® is a registered trademark of Uponor, Inc. ProPEX™ is a trademark of Uponor Ltd.