ProPEX® Lead-free (LF) Brass to Copper Ball Valve (large bore)

Submittal Information
Revision A: Jan. 28, 2010

Project Information

Job Name:

Location: | Part No. Ordered:

Engineer: | Date Submitted:

Contractor: | Submitted By:

Manufacturer's Representative: | Approved By:

Technical Data

Material:	C69300 Brass
Maximum Working Temperature:	250°F (121°C)
Maximum Working Pressure:	250 psi (17 bar)

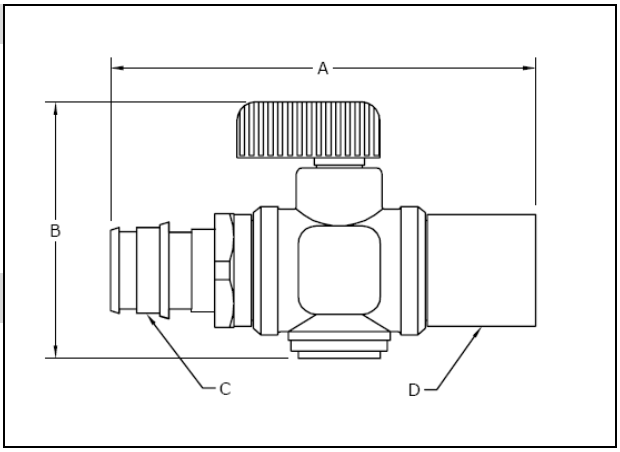

Product Information and Application Use

Uponor ProPEX® Lead-free Brass Ball Valves (large bore) transition brass to copper and feature in-line isolation valves.[1] These valves are not compatible with applications using glycol.

✓	Description	Part Number	A	B	C	D	Weight
☐	ProPEX LF Brass Ball Valve (large bore), ⅜" PEX x ½" Copper Adapter	LF4803850	2.49"	1.63"	0.375"	0.50" CU	0.30 lbs.
☐	ProPEX LF Brass Ball Valve (large bore), ½" PEX x ½" Copper Adapter	LF4805050	2.32"	1.67"	0.500"	0.50" CU	0.30 lbs.
☐	ProPEX LF Brass Ball Valve (large bore), ¾" PEX x ¾" Copper Adapter	LF4807575	3.43"	1.67"	0.750"	0.75" CU	0.30 lbs.

Installation

Install valve according to local building code. Do not dismantle. If soldering, aim flame away from the fitting. For more information, refer to the Uponor AquaPEX® Professional Plumbing Installation Guide or the Radiant Floor Heating Installation Handbook.

Standards

CSA 137.5 and B125; ASTM F877; ASTM F1960; ASME A112.18.1

Codes

UPC; NPC of Canada

Listings

NSF 9- and 61-certified; U.P. Code, Annex G

Related Applications

PEX-a Plumbing Systems
Radiant Heating and Cooling Systems
Snow and Ice Melting Systems
Permafrost Protection Systems
Turf Conditioning Systems

Contact Information

Uponor, Inc.
5925 148th Street West
Apple Valley, MN 55124 USA
Phone: (800) 321-4739
Fax: (952) 891-2008
www.uponor-usa.com

Uponor Ltd.
2000 Argentia Rd., Plaza 1, Ste. 200
Mississauga, ON L5N 1W1 CANADA
Phone: (888) 994-7726
Fax: (800) 638-9517
www.uponor.ca

[1]ProPEX® is a registered trademark of Uponor, Inc. ProPEX™ is a trademark of Uponor Ltd.